General Gage Specification

Global Common

SD-005

ISSUED March 30, 1993
REVISED November 12, 2018

© 2018 Nexteer Automotive

All rights reserved.

Table of Contents

1. Scope 3
2. Reference 3
3. Gage Design 3
4. Gage Manufacture 5
5. Measurement System Analysis 6
6. Comparator Charts 9

List of Exhibits

Exhibit 1: Certificate of Gage Inspection DS-2462 11
Exhibit 2: Sample Comparator Chart 12
Exhibit 3: Comparator Chart Certification 12
Exhibit 4: Chart for 14” Comparator 13
Exhibit 5: Chart for 30” Comparator 14
Exhibit 6: Sample Comparator Title Block 14

1. Scope

The intent of this specification is to assure the gages supplied to Nexteer Automotive shall be statistically capable and meet engineering standards. Gaging equipment standards differ from the standards for production equipment. These standards are intended to provide gages at the minimum cost without sacrificing product quality.

2. Reference

2.1 AIAG/ASQC Measurement Systems Analysis (MSA) Reference Manual.

SD-005 was developed from the MSA Reference Manual. If a conflict exists between SD-005 and the MSA Reference Manual, the MSA Reference Manual takes precedence.

2.2 General Drawing and Manuals Specification SD-003

SD-003 was developed to assure that the mechanical and control drawings for productive equipment supplied to Nexteer Automotive shall be consistent throughout Nexteer Automotive's global operations.

2.3 Nexteer Automotive Standard Form Gages

A set of templates for standard form gage drawings (i.e. plug gages, snap gages, etc.) are available on www.nexteedataexchange.com.

2.4 G1736 Control of Inspection, Measuring and Test Equipment for Certificate of Gage Inspection DS-2462

3. Gage Design

Adherence to the design criteria listed in this section does not relieve the supplier of the responsibility to design a statistically capable gage.

3.1 Gages must be designed in accordance with Nexteer Automotive General Drawing and Manuals Specification (SD-003).

3.2 Drawings must be marked "English" or "Metric" depending upon the dimensioning system used. Yellow paint may be used to identify metric gages if deemed necessary.

3.3 All applicable part numbers or Setup Sheet (SUS) references must be displayed on sheet one. The applicable department and operation number should also be included.

3.4 All dimensions that are critical to the proper functions of the gage are identified by a ⊛ sign next to the dimension. Slip fit/no shake is unacceptable.

3.5 The design of mean masters may be specified for use on the gage types listed in Table 1.

Table 1:

Gage Type	Example
Electronic Indicator	Federal Maxum or Mitutoyo
Mechanical Indicator	Federal or Mitutoyo
Digital Electronic Probes	Solartron

The mean master shall have a tolerance of ± 5% of the part print tolerance. An example follows in Table 2:

Table 2:

Part print dimension = 25.407 / 25.393 mm
Part print tolerance = 25.407 – 25.393 = 0.014 mm
Master tolerance = ± 0.05 x 0.014 mm = ± 0.0007 mm
Master dimension = 25.4007 / 25.3993 mm

3.6 Maximum and minimum masters shall be designed for all air or analog electronic gaging devices. Each master shall have a total tolerance of 5% of the part print tolerance taken towards the mean part dimension. An example follows in Table 3.

Table 3:

Part print dimension = 12.76 / 12.64 mm
Part print tolerance = 12.76 – 12.64 mm = 0.12 mm
Max. Master Max. print dim. / max. print dim. – 0.05 x print tolerance 12.76 / 12.76 – 0.05 x 0.12 = 12.760 / 12.754 mm
Min. Master Min. print dim. + 0.05 x print tolerance / min. print dim. 12.64 +0.05 x 0.12 / 12.64 = 12.646 / 12.640 mm

3.7 Gage instructions are required for gages that are not Nexteer Automotive Standard Form Gages and must be included in the design package.

3.8 Gage instructions (if required) must be displayed on a separate sheet (8 ½ x 11) and the sheet number (preferably sheet 2) called out on sheet one. These instructions may be reproduced and laminated for mounting in the general gaging area.

3.9 Gages subject to frequent use must have all details dimensioned for interchangeability.

3.10 Error proofing and changeover time should be considered if a gage is used to measure multiple products.

3.11 Fixture gages weighing more than 30 lbs. shall have threaded holes for eyebolts or other provisions for lifting assistance.

3.12 Backpressure instruments shall be used on all gages requiring air.

3.13 The location tolerance for dowel holes shall be within ± .005 mm (0.0002”).

3.14 Gage design must include non-metallic storage for all masters and changeover critical gage details. Storage provided for loose details should be attached to the gage base, if possible. For all indicator snap gages, the master shall be attached to the gage frame by a tether cord.

3.15 Wear surfaces shall be hardened steel, carbide and/or coated with a hard wear surface.

3.16 All non-functional gage surfaces shall be properly treated to prevent corrosion (i.e. black oxide coated). Slides should not be treated or coated.

3.17 Statistical Process Control collection devices must be compatible with Nexteer Automotive specifications. The respective engineer must provide requirements to the design supplier.

3.18 Indicators should be mounted on adjustable backs.

3.19 Gage design must be approved before the gage is manufactured.

4. Gage Manufacture

4.1 A completed Certificate of Gage Inspection (DS-2462) must be supplied with all new gaging equipment. The certificate must include the following information.

- Supplier and Purchase Order data
- Critical dimensions and actual measurements
- Inspectors signature and date of inspection

4.2 Inspection Measurement and Test Equipment Certificates of calibration must be attached to the Certificate of Gage Inspection (DS-2462) form.

4.3 The gage manufacturer must provide a tag with each gage (if gage size permits).

4.3.1 Brass is the preferred tag material.

4.3.2 The tag is to include the gage number and part numbers of the parts the gage is used to check. In cases where many part numbers are associated with a gage or gages, other methods of part number identification may be used. The tag should be marked as specified on the print.

4.3.3 The preferred method to attach the tag is with #8-32 button head screws. Other methods may be used with approval from the respective Engineer(s).

4.3.4 Permanently mark information on gages that are too small to permit mounting of a tag.

4.3.5 Loose details must be identified with the gage number, detail number and revision level.

4.3.6 The responsible engineer must specify if a special tag is required for gages that are used to check Key Product Characteristics (KPC’s), Key Control Characteristics (KCC’s) or other specially designated characteristics.

4.3.7 The tags are to be located so as not to be damaged during normal gage use.

4.4 Masters should be identified by size, whenever possible.

4.5 Molds or patterns used to manufacture fixture gage details shall become the property of Nexteer Automotive.

4.6 All sharp edges on gages should be broken, unless otherwise specified.

4.7 The supplier is responsible for properly packaging the gage for shipment. Gages damaged in shipment because of poor packaging shall be the supplier's responsibility. It is suggested that the supplier provide insurance against damage during shipment.

4.8 When errors are found in the prints furnished to the manufacturing source, it is the manufacturer's responsibility to seek guidance and assistance from the engineer requesting the gage.

5. Measurement System Analysis

5.1 All new gages supplied to Nexteer Automotive must pass measurement system variation tests.

5.1.1 Nexteer Automotive uses the average and range method for Repeatability and Reproducibility Studies. Reference the MSA Manual.

5.1.2 Suppliers shall be responsible for conducting the Measurement System Analysis (MSA) tests. Nexteer Automotive personnel should assist the supplier in gage qualification studies if necessary.

5.1.3 Parts used for gage evaluations should be selected as specified in the MSA Manual.

5.1.4 Gages shall be accepted by Nexteer Automotive based on the acceptance criteria shown in Table 4.

Table 4:

R & R %	Data Range (Ave.) as a % of Part Print Tolerance +	Disposition of Gage
< 10%	< 3.3%	Accept
10 – 30%	3.3 – 10%	Conditional Acceptance *
> 30%	> 10%	Not Acceptable

+ The data range values shown are based on 3 trials with the number of parts times the number of appraisers > 10.

* May require an action plan for improvement before approval by the engineer.

5.2 Instrument measurement studies are required where linearity must be verified for acceptance. Reference “Guidelines for Determining Linearity” in the MSA Manual.

5.2.1 Linearity studies should be performed when the measurement device/system is measuring actual print specifications or is providing data that is related to a safety critical operation. The engineer in charge of procuring the equipment shall determine which device/system requires a linearity study.

5.2.2 Acceptance criteria for the linearity study shall be based on the Manufacturing Engineering SPC software and using reproducibility as the metric. Use the guidelines for gage R&R acceptability criteria. Enter data into the gage R&R table treating the machine measurement

device as one operator and the verification device as another operator for the same trial. Comparing the two measurement devices in this manor shall determine the reproducibility.

5.3 Where process capability is very high, the process variation may be substituted for the part print tolerance when calculating the R & R%.

5.4 When a mechanical Measurement Systems Analysis (MSA) is required for an attribute gage, a Kappa study should be performed.

5.4.1 The purpose of the Kappa MSA is to validate that the measuring and/or test equipment meets the design intent for the system.

Note: System calibration determines that the gage or measuring system has been manufactured correctly to its design. Calibration alone does not establish/confirm that the gage or measuring system is checking the component correctly or that it's design "intent" is correct.

5.4.2 If the gage's (or measuring system's) design intent can be applied to one or more similar gages then a "Family Type" approval of the MSA is allowed per Nexteer's Global Procedure G1736 (Control of Inspection, Measuring, and Test Equipment). Family Type approval means that a previous Kappa study can be applied to new gage based on certain criteria and does not need to be repeated.

1. Before a gage may be accepted via the "family" approval process, approval of the gage "family" must be obtained from both the Manufacturing Engineer buying the gages and Quality Engineer. This approval shall be documented on the MQ plan and approved by the Plant Engineer. Approval of the MQ plan confirms agreement.
2. Explanations for what consist of a gage or system family for the MSA may include, but not be limited to the following:
   - Similarity of function and application
   - Same product tolerance
   - Same gage type and/or size
3. Gage types which may fall into families include, but are not limited, to the following standard gages:
   - Cylindrical rings gages
   - Plug gages
   - Thread ring gages
   - Thread plug gages
   - Snap gages
   - Flush pin gages
   - Template gages

5.4.3 Criteria for Attribute Kappa Studies

1. The Kappa studies for attribute gages should utilize as many parts as practical, the preference is a minimum of 50 parts. (Note: Customer Specific Requirements may dictate the part quantity and distribution of samples in the Kappa study)

a. Parts in the study should represent the normal range of distribution inherent to the process as determined at MQ1.

b. For maximum confidence in the Kappa study, there should be a mix of good & bad parts, including parts at and outside of the specification limits. The goal should be to have approximately 25% of the parts at or near each limit.

c. In cases where it is difficult or expensive to make special Kappa parts, the team may decide to use a smaller number of parts for the study. It must be understood that in doing so there may be an increase in the variability of the results obtained. If less than 50 parts are used, the quantity should be documented on the MQ plan.

d. In lieu of Kappa parts, it may be acceptable to use gage masters/pins etc. in place of production parts. This exception should be documented on the MQ plan.

2. The Kappa study should use 3 operators and 3 trials (AIAG 4th Edition)

3. The study should be conducted with parts rated in random order

4. Go/No Go (max/min) gages are to be treated as separate gages and therefore require separate studies. Meaning, for the same population of test parts, representing the full tolerance distribution, one Kappa study shall be done to test the upper end of the tolerance and a second study to test the lower limit. In the case of combination gages, go/no/go on the same pin for example, both studies can be done simultaneously but documented as two distinct studies.

5. Depending on the product feature, characteristic, and/or customer requirements; parts being considered for the study should be independently verified with a variable type gage, CMM or another known standard. Information or measurements relating to each part/feature should be retained.

6. When utilizing an attribute style gage, the force required to apply the gage to the workpiece should be taken into consideration. Application force should be reasonable, so NOT damage the workpiece as the gage is applied.

5.4.4 Acceptance Criteria for Attribute Gage R&R Study

1. All Kappa values should be 0.75 or greater. If the Kappa value is less than 0.75, it must be approved by the Plant Engineer.

   a. The only exception to the above requirement is if a gage has been designed so that it's limit(s) are less than the product specification limits (i.e. an attribute gage designed to only accept parts that are manufactured to 75% of part print limits). In these instances, it may be acceptable for the Kappa values to be less than 0.75.

   b. The only reason to allow for the modification to the acceptable Kappa value is because the gage is rejecting parts known to be good (i.e. within product specification).

2. Per MSA requirements, all Kappa values should include the following: between appraiser variation, within appraiser variation, and appraiser to standard variation. Additionally, the study should also consider the gaging system's overall effectiveness, miss rate, and false alarms.

3. The Kappa study can be done using either Stat Pack or Minitab.

4. When evaluating the gaging system, the lowest Kappa value from ALL the tests, shall be considered the measurement system's "score."

6. Comparator Charts

6.1 Comparator charts drawn to check production parts differ from charts drawn to check tooling details in the following areas: (See Exhibit 2).

6.1.1 The chart must be assigned a drawing number with a GA prefix per SD-003.

6.1.2 The chart drawing numbers shall be listed on the set-up sheets, QC charts or CAPS.

6.1.3 Production part charts must be drawn with double lines and dimensioned to show the maximum and minimum conditions being checked.

6.2 Comparator charts drawn to check tooling details must adhere to the following standards:

6.2.1 The chart shall have the same drawing number as the tool detail being checked and reference the tool number, detail number and revision level.

6.2.2 The chart should be listed with the tooling below the detail to be checked.

6.2.3 The chart should be drawn after the detail drawing has been checked.

6.2.4 Details for which a comparator chart has been drawn shall have the following note directly below the detail number and material specification:

"To be checked by comparator chart"

6.2.5 Tooling comparator charts must be drawn with single lines showing the mean condition and dimensioned with plus and minus tolerances.

6.2.6 Tool numbered comparator charts must be included in the tooling folder.

6.3 Charts shall have a vertical and horizontal centerline for alignment. The vertical and horizontal start lines must be labeled for easy identification.

6.4 Comparator charts shall be accurate within .015 inch (.381mm). Charts may be checked using GA-284183 or a similar means.

6.5 The Comparator chart title block must be drawn within the inscribed portion of the chart.

6.6 The drawing number of the chart shall be shown in the lower right or upper left corners approximately as viewed on the "C" size printed sheets.

6.7 Comparator charts shall be drawn at 31.25 magnification unless otherwise specified.

6.8 Comparator charts shall not be folded.

6.9 If required, comparator table moves must be called out on the comparator chart instructions.

6.10 Comparator Chart accuracy and certification/verification must be included on the chart (Exhibits 1 and 2).

6.11 The Mylar chart paper stability certification marks must lie on the X and Y axis, 330 mm from center.

6.12 The comparator chart tolerance should be shown on the chart.

6.13 Chart stability should be verified using a glass overlay such as GA-284183.

6.14 Charts must be plotted on the printable side of the mylar in reverse orientation (mirror or backwards). When the chart is placed on the comparator all writing should be readable from the front side of the chart. The plotted surface (back side) should be coated with protective sealant as described in SD-005.

6.15 Comparator charts should be coated with a sealant to protect them from the operating environment. An example of a sealant would be Workable Fixatif #1606, available from The Krylon Product Group.

6.16 The comparator chart title block must include the following (Exhibit 6):

- Drawing Number
- Detail Part Number or Tooling Detail Number to be checked
- Certification Information
- Plant
- Department
- OP Number
- Scale
- Drawn By and Date
- Checked By and Date

CERTIFICATE OF GAGE INSPECTION
Nexteer Automotive

Gage/Serial No. _____

Page No. _____ of _____ Quantity _____

All dimensions on drawing designated by ⊕ as defined in Nexteer Automotive General Gage Specification (SD-005) must be inspected by the supplier and recorded on this sheet.

SUPPLIER (Complete the section below)	NEXTEER AUTOMOTIVE (Complete the section below)
NAME _____	DATE RECEIVED _____
MBO/BLPO NO. _____ REQ/ITEM _____	PART NO. _____
SBPO/REL NO.	FOR PLANT
SUPPLIER JOB NO.	ENGINEER
BLUE PRINT REVISION DATE	

CALIBRATION STANDARD	DETAIL #	DIMENSION & TOLERANCE	SUPPLIER CHECK	CALIBRATION STANDARD	NEXTEER CHECK

SUPPLIER SIGNATURE	DATE	NEXTEER SIGNATURE	DATE

DISPOSITION OF GAGE	COMMENTS
☐ ACCEPT: SEND TO PLANT	
☐ PROVISIONAL: SEND TO PLANT	
☐ REJECT: RETURN TO SUPPLIER	
ENGINEER _____	

15-1-5-F3 (DS-2462)
Rev. 09-05-18

Exhibit 1: Certificate of Gage Inspection DS-2462

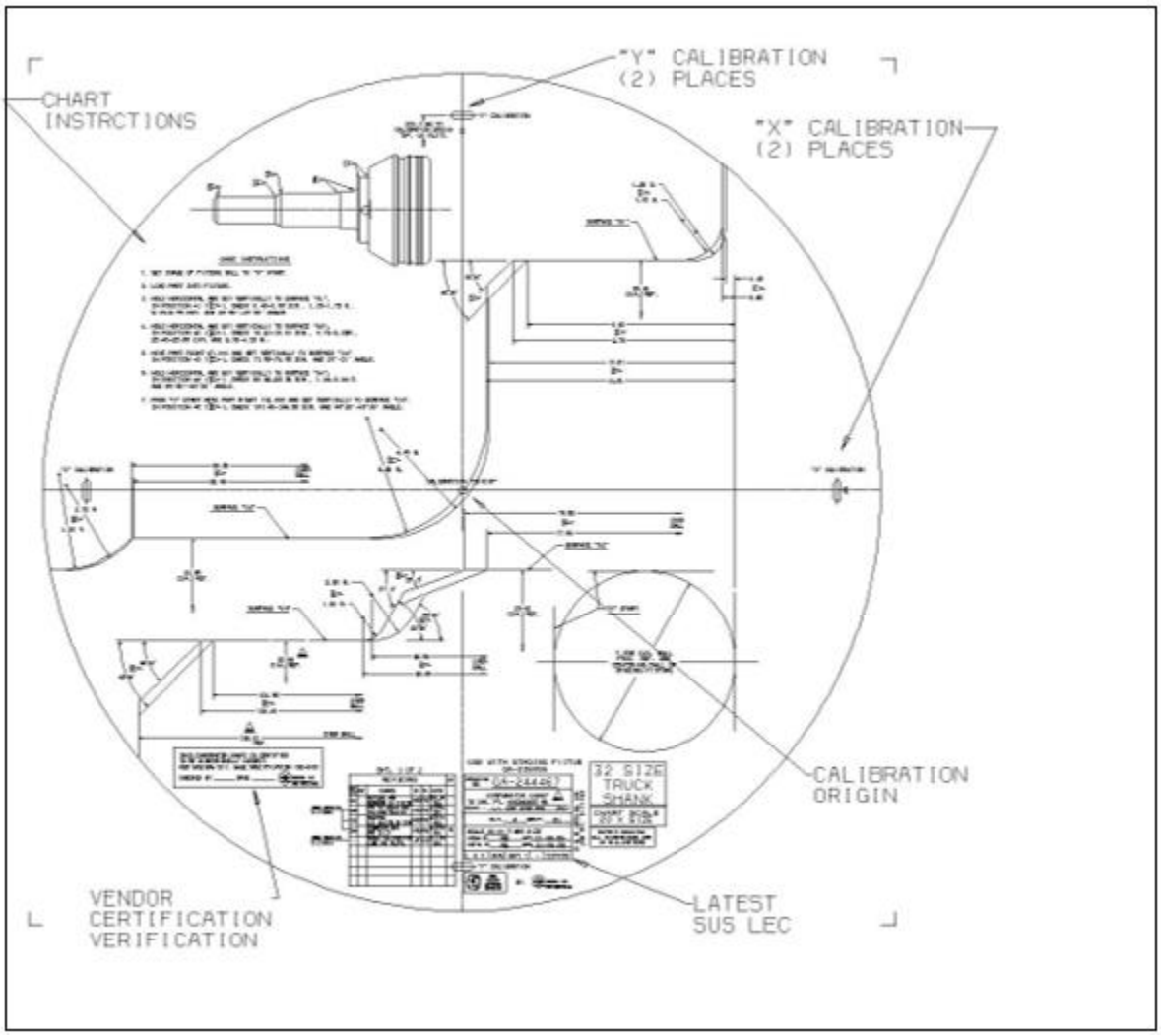

Exhibit 2: Sample Comparator Chart

THIS COMPARATOR CHART IS CERTIFIED TO BE DIMENSIONALLY CORRECT PER NEXTEER AUTOMOTIVE GENERAL GAGE SPECIFCIATION (SD-005).

CHECKED BY: _____ DATE: _____

Exhibit 3: Comparator Chart Certification

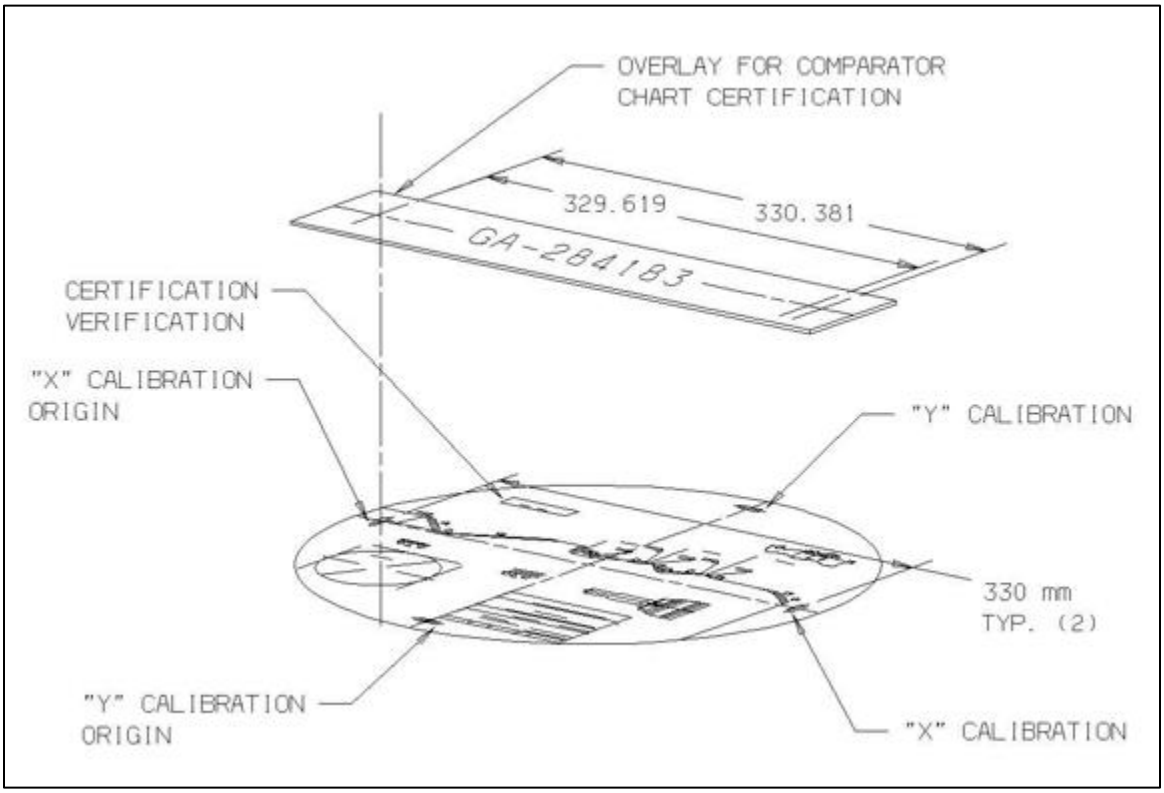

Exhibit 4: Chart for 14" Comparator

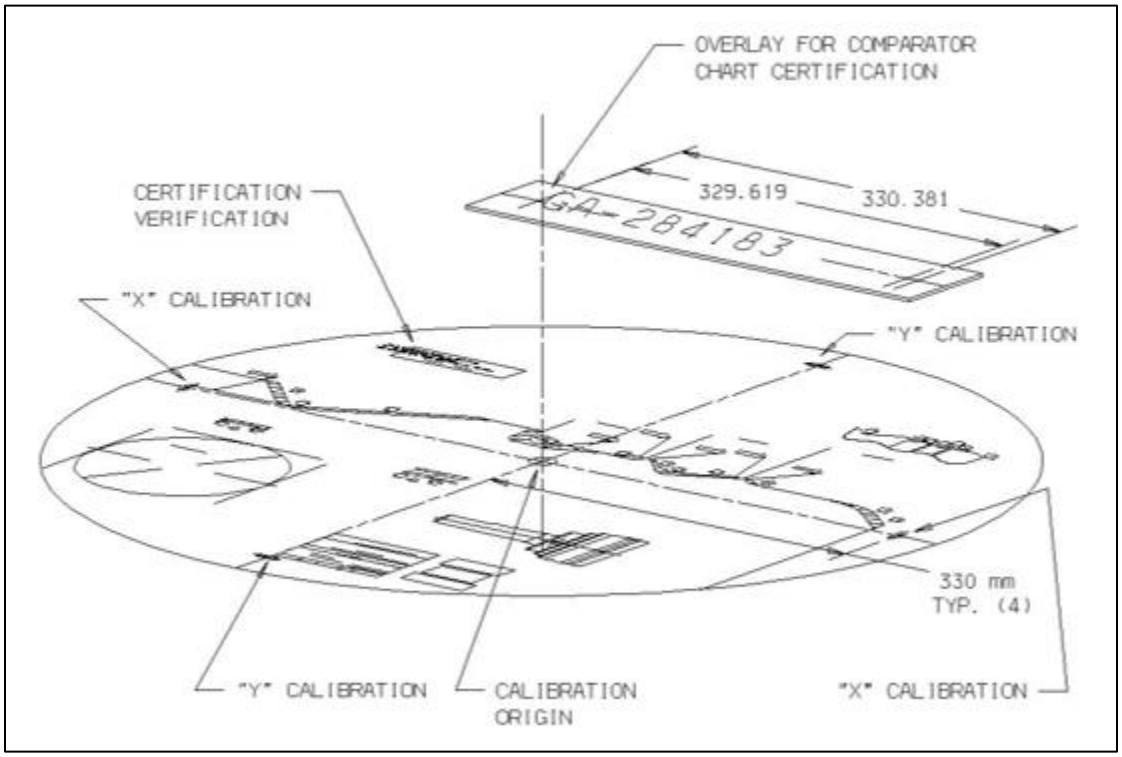

Exhibit 5: Chart for 30" Comparator

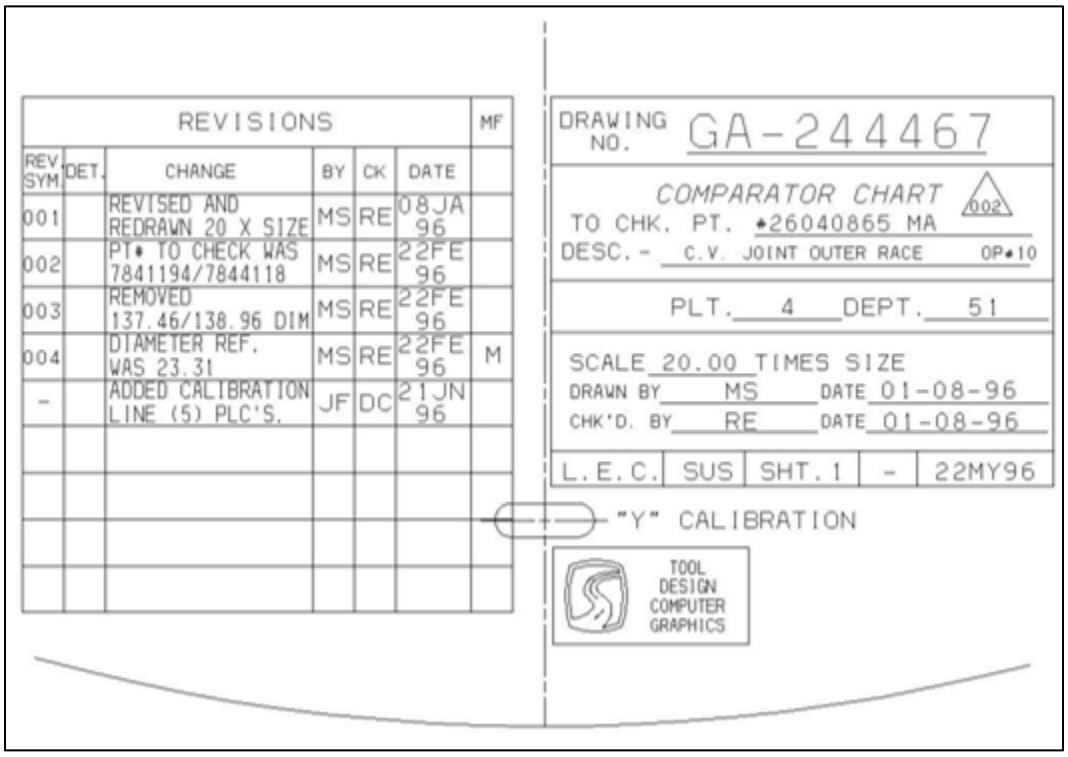

Exhibit 6: Sample Comparator Title Block

RECORD OF REVISIONS

Revision No	Date	Section	Description
001	30MAR93	ALL	Original approval & issue date.
002	10JN98	ALL	Major specification revision.
003	01FE05	ALL	Reviewed / updated to reflect current practices.
004	10DE08	5	Added 5.2.1, linearity study requirements.
005	08JN09	5	Added 5.2.2, acceptance criteria for the linearity study, and 5.4, measurement system for Kappa study.
006	06NO09	ALL	Company name update. All SD documents are global common.
007	14MY18	5.4	Update requirements for Kappa Studies. Deleted reference to SPC5.
008	12NO18	2.4	Added section 2.4 ref. to G1736 Control of Inspection, Measuring and Test Equipment for Certificate of Gage Inspection DS-2462. Updated Exhibit 1 form.
009			
010			
011			
012			
013			
014			
015			
016			
017			
018			
019			
020			